TRANSLAND

Product Catalog

Table of Contents

AgCat	Section A
Gate Boxes	A1
Spreaders	A1 - A2
Swathmasters	A2
Quick Disconnects	
Valves	
Pumps	
Booms	
Part Info	A3 - A6
Gate Boxes	A3
Spreaders	A4
Valves	A5
Pump Mounts	A6
Pumps	
Booms	
Air Tractor	Section B
Gate Boxes	B1 - B2
Spreaders	B2
Valves	B3
Pumps	B4
Spreaders	
Booms	B4 - B5
Part Info	B6 - B14
Gate Boxes	B6 - B7
Spreaders	B8
Valves	B9 - B11
Pumps	B11 - B12
Strainers	B12
Booms	B13 - B14
Deflectors/Meterates	B14
Cessna	Section C
Gate Boxes	C1
Spreaders	C2
Valves	
Pumps	
Booms	C3
Part Info	C4 - C7
Gate Boxes	C4
Spreaders	C5
Valves	C5 - C6
Pumps	C6 - C7
Strainers	C7
Booms	
Dromader	Section D
Gate Boxes	D1 - D2
Spreaders	D2
Valves	D2 - D3
Pumps	D3
Booms	
Part Info	D4 - D9
Gate Boxes	D4 - D5
Spreaders	D5 - D6
Valves	D6 - D7
Pumps	D8
Booms	D8 - D9
Thrush	Section E
Gate Boxes	E1 - E2
Spreaders	E2
Valves	E2 - E3
Pumps	E3
Booms	E3 - E4
Part Info	E4 - E9
Gate Boxes	E4 - E5
Spreaders	E5 - E6
Valves	E6 - E7
Pumps	E7 - E8
Booms	E8 - E9
Helicopters	Section F
Booms	F1
Accessories	
Part Info	F2 - F3
Booms	F2
Accessories	F3
Miscellaneous	Section G
Accessories	G1 - G5
Components	G6 - G10
Appendix	Section H
Spreaders	H1
Swathmasters	H2
Aircraft Calibration	H3
Order Forms	Section O
Distributors	O6

This file has ben truncated in size for ease of use on the internet. See other files listed in this area for the other sections.

This file contains sections: A, G, H and O only.

If you would like the complete catalog, please e-mail Sales@TranslandLLC.com or call 940.687.1100

Introduction

Transland
1206 Hatton Road, Suite A
Wichita Falls, TX 76302 - U.S.A.

Telephone: (940)687-1100
Toll Free: (800)388-2511
Fax: (940)687-1941
E-mail: sales@translandllc.com

Shipping

Shipping charges for motor freight and air freight are payable upon delivery. Shipment of items such as spreaders, Swathmasters, Gate Boxes or large orders are normally shipped by motor freight. Smaller items are usually shipped by United Parcel Service. Method of shipment and/or carrier should be specified when ordering. All shipments are F.O.B., Wichita Falls, Texas 76302

Weight

All weights are net weights and do not include packaging.

Exporting

Export order terms are:

- Sight Draft or Letter of Credit
- Prepayment by bank draft or check

Payment

Terms offered are:

- Net 30 days with approved credit
- Prepayment
- Visa & MasterCard

Replacement Parts

Any part of any piece of equipment shown in this catalog can be replaced. Give model and serial number of the unit for which the part is being ordered. If the unit has no number, give the complete description of the unit, date of purchase and description of the part/parts required.

Shipment of Parts to Transland

All parts returned to Transland are to be shipped freight prepaid. To obtain the lowest motor freight shipping rate, indicate on the bill of lading the following:

Sprayers N.O.1, NMFC No. A-11
Item 9385, CL85
10 vane spreaders - CL200
8 vane spreaders - CL150

Parts returned must include:

- A copy of the invoice showing original purchase
- A detailed explanation of the reason for return

Warranty

Transland, warrants the products furnished in this catalog to be free from defects in material and workmanship under normal use and service for a period of one (1) year from date of sale by Transland. Transland's obligation under the warranty shall be to repair or replace any product which is returned to Transland within the warranty period and which, upon inspection by Transland, is proven to be defective. The warranty shall not apply to any product which has been subject to misuse, negligence, accident or to items such as Seals, Gasket or Bearings that require replacement during routine maintenance. If, however, a Transland product does not perform to the satisfaction of the user within the first 90 days after purchase, such product may be returned (freight collect) for a full refund.

Hours: 8:00 am to 5:00 pm Central time
Monday through Friday

To order, contact dealer for full details and specifications.

AGCAT

Gate Boxes

PARTS	A	B	B+	Page #
22558	✓	✓		A3
22577			✓	A3
22623	✓	✓	✓	A3

Seeder Plate

PARTS	A	B	B+	Page #
52807	✓	✓	✓	A3

Adapter Boxes

PARTS	A	B	B+	Page #
20268	✓			A3
20266	✓	✓		A3
22778	✓	✓		A3
22273			✓	A3
22275			✓	A3

GATE BOXES

Spreaders

PARTS	A	B	B+	Page #
22355	✓	✓	✓	A4
22358	✓	✓	✓	A4

Swathmasters

PARTS	A	B	B+	Page #
54597	✓	✓	✓	A4
54401	✓	✓	✓	A4

SPREADERS

AGCAT

SPREADERS

Quick Disconnects

PARTS	A	B	B+	Page #
23505	✓	✓	✓	A4
25505	✓	✓	✓	A4

2" Spray Valves

PARTS	A	B	B+	Page #
58324	✓	✓	✓	A5
22324	✓	✓	✓	A5
20380	✓	✓	✓	A5
58380	✓	✓	✓	A5

VALVES

3" Spray Valve

PARTS	A	B	B+	Page #
53380	✓	✓	✓	A5

Loader Valve

PARTS	A	B	B+	Page #
20393	✓	✓	✓	A5

2" Shut-off Valve

PARTS	A	B	B+	Page #
20373	✓	✓	✓	A5

PUMPS

Pump Mount

PARTS	A	B	B+	Page #
20498	✓	✓	✓	A6

Pumps

PARTS	A	B	B+	Page #
21859	✓	✓	✓	A6
51859	✓	✓	✓	A6

BOOMS

2" Booms

PARTS	A	B	B+	Page #
56524	✓	✓	✓	A6
58524	✓	✓	✓	A6

Boom Hangers

PARTS	A	B	B+	Page #
22922	✓	✓	✓	A6
56675	✓	✓	✓	A6
56676	✓	✓	✓	A6

GATE BOXES

GATE BOXES

22558 - Gate Seal 60713 & Mounting Gasket set 60728
Hopper Throat 16" x 38"
Includes: 2" Q.D. cap & dust cap. Adapter box 22273.

22577 - Gate Seal 60713 & Mounting Gasket set 60787
Hopper Throat 23.5" x 31.25"
Throat size 26.375" x 34" outside flange, 23.5" x 31.25" inside flange

22623 - Weld Assembly/Gate Box 22601

METERING PLATE

52807 - Fits 22104 & 20888 rotary gate Spreaders & Swathmasters

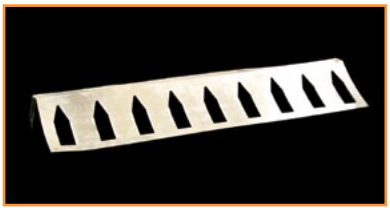

ADAPTER BOXES

20268 - 8" x 26.25" to 9.5" x 25"
Replaces subtank for bolt-on attachment for Gate Boxes
6.5" drop
(.050" thick stainless steel)

20266 - 12.3125" x 25"
Replaces the subtank. 8" deep & reduces the 12.3125" x 25"
opening to standard throat size of 9.5" x 25"
(.050 thick stainless steel)

22778 - 12.3125" x 25" to 9.5" x 25"
Same as 20266 w/ valve mfg. hole

22273 - 14.25" x 27" to 16" x 38"
Reduces the 16" x 38" opening to standard throat size of 14.5" x 27"
8.25" drop
(.050 thick stainless steel)

22275 - 26.375" x 34" to 9.5" x 25"
For 34" to 25" w/ 6" drop
(.063 thick stainless steel)

*For parts breakdown see translandllc.com

SPREADERS

SPREADERS

22355 - For 38″ Gate Boxes
Has deep throat for volume. Spreader can be adjusted for higher or lower volume.

22358 - Heavy Duty Spreader
For 38″ Gate Boxes
Similar to 22355 but has a deeper trailing edge.

SWATHMASTERS

54597 - 38″
Includes 5 vane 38″ 22364 center section
22616 & 22617 wing panels

54401 - 38″
Includes 22615 center section, 22616 & 22617 wing panels

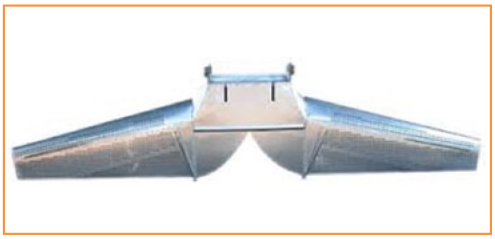

QUICK DISCONNECTS

23505 - 38″ Quick Disconnect Plate
25505 - 38″ New Style w/ studs

*For parts breakdown see translandllc.com

VALVES

2" SPRAY CONTROL VALVES

58324 - Stainless 2" Q.D. inlet at 25° & 2" hose outlet connector ports.
1.5" return hose connector port & adjustable suckback.
Stainless Ball: 52465
Service Kit: 53390

58380 - Stainless 2" bank, 2" hose inlet & outlet ports.
1.5" return hose connector port & adjustable suckback.
Stainless Ball: 52465
Service Kit: 53390

20380 - Aluminum Spray Control Valve
Same as above in aluminum
Brass Ball: 42465
Service Kit: 54507

22324 - Aluminum Spray Control Valve
Same as above in aluminum
Brass Ball: 42465
Service Kit: 54507

3" SPRAY CONTROL VALVE

53380 - Stainless 3" hose inlet & outlet ports.
Stainless Ball: 52326
Service Kit: 54474

LOADER VALVE

20393 - 2" Aluminum Loader Valve
Service Kit: 54009

2" SHUT-OFF VALVE

20373 - Aluminum Shut-off Valve
1.5" Q.D. outlet & 2" hose connector inlet
Brass Ball: 52338
Service Kit: 54010

*For parts breakdown see translandllc.com

PUMP MOUNTS

PUMP MOUNT

20498 - Pump Mount Assembly
Replaces factory pump mount bracket.
Includes: 21098 or 20480 lower component & 20479

PUMPS

PUMPS

21859 - Aluminum Wind Driven Pump
2″ hose 45° angled inlet & 2″ hose outlet connector ports
Service Kit: 54346

51859 - Stainless Steel Wind Driven Pump
2″ hose 45° angled inlet & 2″ hose outlet connector ports
Service Kit: 54346

BOOMS

2″ BOOMS

56524 - 210″ Streamline Boom, 210″ Long
Includes: (35) .125″ female fittings, 1.5″ hose barb inboard &
1″ male pipe thread outboard.

58524 - 210″ Streamline Graduated Boom, 2″ beginnings 4 graduations
Includes: (35) .125″ female fittings, 1.5″ hose barb inboard &
1″ male pipe thread outboard.

BOOMHANGERS

22922 - Alumnimum Boomhanger

56675 - Drop hanger

56676 - Drop hanger & fittings
Includes: Stainless steel Q.D. fittings & swivel Boom Hanger mount

*For parts breakdown see translandllc.com

ACCESSORIES

VANE EXTENSION KITS

For 25", 38" & 41" Spreaders:
55124 - Vane Extension kit
Fits 23501 & 23502. Includes (x10) 23439 vane extensions.

54424 - Vane Extension kit
For Thrush 20250 & 20160 high volume Spreaders.
Extends Spreader front vanes 3.5" X 4". Includes 8 vane extensions.

54498 - Vane Extension kit
FIts 20240 Spreader. Includes 8 vane extensions.

55125 - Vane Extension kit
For 22007 Spreader. Includes 8 vane extensions.

56325 - Vane Extension kit
For 22007 Spreader. Includes 8 vane extensions.

For 38" or 41" Gate Box:
10384 - Vane adjustment rod, .3125 threaded stainless steel, heavy duty rod
10870 - Washers
80552 - Vane adjustment nut, .3125 stainless steel nut

SPREADER QUICK DISCONNECT ATTACHMENT PLATES

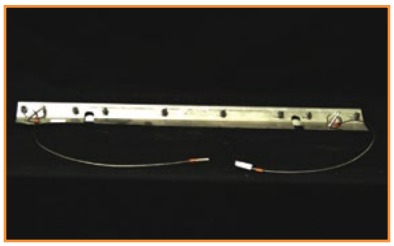

For ALL 25" Gate Boxes:
23507 - Quick Disconnect Plate

38" Air Tractor & Ag-Cat:
23505 - Quick Disconnect Plate
25505 - New Style w/ studs

41" Thrush & Dromader:
23504 - Quick Disconnect Plate

SPREADER ACCESSORIES

All Spreaders:
50217 - Over Center Latch
Fits 23501 & 23502. Includes (x10) 234339 vane extensions

Air Tractor & Ag-Cat
56566 - Rear Brace Assembly
38" Spreader. 2 each per Spreader.

Spreader Cart
50067 - Spreader Cart
Stainless steel, front loading w/ hydraulic lift. One man can install and remove.

*For parts breakdown see translandllc.com

ACCESSORIES

BUTTERFLY VALVES

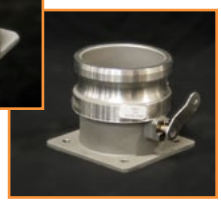

1.5″
53622 - All stainless construction

2″
23623 - Aluminum body, stainless disc & shaft
53617 - All stainless steel construction for Cessna
53623 - All stainless steel construction

2.5″
23624 - Aluminum 14° male Q.D. with butterfly Valve
53624 - Stainless steel 14° male Q.D. with butterfly Valve
23626 - Aluminum body, stainless disc, shaft and male Q.D. with butterfly Valve
53626 - All stainless steel version of 23626

3″
23625 - Aluminum body, stainless disc & shaft. Standard on all new Air Tractors.
53625 - All stainless steel version of 23625

BALL BOOM SHUT-OFF VALVES

1.5″ Ball Boom Shut-Off Valve
58301 - Stainless Steel

2″ Ball Boom Shut-Off Valve
58302 - Stainless Steel

BOOM SHUT-OFF CABLES

25119 - Push/Pull Round Knob Cable
5′ long

25122 - Push/Pull Round Knob Cable
6′ long

25118 - Push/Pull T-Handle Cable
With locking T-Handle. 4.5′ long

25120 - Push/Pull T-Handle Cable
With locking T-Handle. 5′ long

25121 - Push/Pull T-Handle Cable
With locking T-Handle. 6′ long

25123 - Push/Pull T-Handle Cable
With locking T-Handle. 8′ long

25124 - Push/Pull T-Handle Cable
With locking T-Handle. 7′ long

*For parts breakdown see translandllc.com

ACCESSORIES

STAINLESS STEEL DRY LOCKS

Standard Dry Locks:
2″
50002 - Adapter
Service Kit: 51935

3″
50003 - Adapter
Service Kit: 51937

Quick Disconnect Dry Locks:
2″
53002 - Adapter
Service Kit: 51935

3″
23003 - Adapter
Service Kit: 51937

ALUMINUM WIND DRIVEN PUMPS

25010 - Service Kit: 54346

25011 - Service Kit: 54346

25015 - 3″ hose straight inlet & 2″ hose outlet connector ports w/o fan.
Flow rate at 175 GPM/76 PSI at 3600 RPM
Service Kit: 54029

STAINLESS STEEL IMPELLERS

6″ Stainless Steel Impellers:

52352 - Replaces 42352 aluminum Impeller. Fits 20783 & 20790 Pumps.
50887 - Replaces 40887 aluminum Impeller. Fits 21066 Pump.
53640 - Replaces Arginautics 6506 Impeller

6.5″ Stainless Steel Impellers:
50782 - Replaces 40782 aluminum Impeller. Fits 21859, 21860, 21861, 21863, 21864, & 21869 Pumps

51420 - High Volume version of 50782

7″ Stainless Steel Impellers:
50988 - Replaces 40988 aluminum Impeller

CESSNA COUPLING ASSEMBLY

50761 - Stainless Steel Coupling Assembly
For 51066 Pump. This 2″ Q.D. angled female coupling assembly attaches the intake hose to the pump outlet.

20761 - Aluminum Coupling Assembly
Same as above

*For parts breakdown see translandllc.com

ACCESSORIES

THRUSH PUMP INLETS

50945 - Pump Inlet, stainless steel
2.5" hose at 60° inlet for 6.5" Pump

50944 - Pump Inlet, stainless steel
3" hose at 60° inlet for 6.5" Pump

50858 - Pump Inlet, stainless steel
3" hose straight inlet for 6.5" Pump

50859 - Pump Inlet, stainless steel
3" hose at 45° for 6.5" Pump

GRADUATED BOOM STOCKS

55097 - 1" Streamline Boom Stock (.049 wall)

55098 - 1.25" Streamline Boom Stock (.049 wall)

55101 - 1.5" Streamline Boom Stock (.049 wall)

55099 - 1.75" Streamline Boom Stock (.065 wall)

55100 - 2" Streamline Boom Stock (.065 wall)

55104 - 2" Airfoil Boom Stock (.065 wall)

55106 - 2.25" Streamline Boom Stock (.065 wall)

55102 - 2.5" Streamline Boom Stock (.065 wall)

55103 - 3" Streamline Boom Stock (.065 wall)

BOOM HANGERS

For AgCat:
22922 - Aluminum Boom Hangers for AgCat over wing.
56675 - Drop Hanger
56676 - Drop Hanger & fittings
Drop hanger with stainless steel Q.D. fittings & swivel boom hanger mount.

For Cessna:
23097 - Boom Hangers, long assembly
23098 - Boom Hangers, medium assembly
23099 - Boom Hangers short assembly
57543 - Boom & Hanger kit for Cessna, includes 2 each of:
23097, 23098, 23099 & 56543 Booms.

*For parts breakdown see translandllc.com

ACCESSORIES

END FITTINGS

Stainless Steel:
41057 - 1" NPT Male plug
41058 - 1" NPT Female half coupling
50727 - Coupling assembly
50913 - 1.5" Male Q.D. streamline coupling
56505 - 1.5" Female Q.D. coupling
56507 - 2" Female Q.D. coupling
56506 - 2.5" Female Q.D. coupling
56502 - 3" Female Q.D. coupling

Aluminum:
20727 - Coupling assembly
1.5" Female Q.D. fits streamline Boom

40913 - Male streamline coupling
1.5" Male Q.D. fits 30285 Y-Boom

41017 - Outboard end cap
1" Female Q.D.

41018 - Outboard end cap
1" Male Q.D.

STAINLESS STEEL BAFFLE

56716 - Stainless Steel Baffle
For 510 gallon Thrush hopper. Replaces factory aluminum baffle. 4 required.

OVERFLOW TUBE

56717 - Overflow Tube
For 510 gallon Thrush hopper. Stainless steel.

METERING PLATE

22752 - 41" Metering Plate

*For parts breakdown see translandllc.com

COMPONENTS

ADAPTERS

Female Thread, Aluminum
85050 - 1″
85051 - 1.25″
85052 - 1.5″
85053 - 2″
85054 - 2.5″

Male Thread, Aluminum
85057 - 1″
85058 - 1.25″
85059 - 1.5″
85060 - 2″
85061 - 2.5″

QUICK DISCONNECT FITTINGS/COUPLERS

Male Thread, Aluminum
85286 - 1″
85287 - 1.25″
85289 - 2″
85290 - 2.5″

Female Thread, Aluminum
85255 - 1″
85256 - 1.25″
85257 - 1.5″
85258 - 2″
85259 - 2.5″

20761 - Coupling, female thread, 2″ aluminum intake coupling from Gate Box. Cessna hydraulic spray system.

50761 - Coupling
Female Thread
Stainless steel version of 20761

56505 - Q.D. Coupling, Female
1.5″ Stainless steel

56507 - Q.D. Coupling, Female
2″ Stainless steel

Quick Disconnect Dust Caps with neoprene gaskets

Aluminum
85319 - 1″
85320 - 1.25″
85321 - 1.5″
85322 - 2″
85323 - 2.5″
85207 - 3″

*For parts breakdown see translandllc.com

COMPONENTS

QUICK DISCONNECT FITTINGS/COUPLERS (Continued)

Stainless Steel
56508 - 1.5"
56509 - 2"
56511 - 2.5"
56504 - 3"
56501 - 4"

Hose, Aluminum
85280 - 1"
85281 - 1.25"
85282 - 1.5"
85283 - 2"
85284 - 2.5"
85034 - 3"

Hose, Female, Stainless Steel
55282 - 1.5"
55283 - 2"
55284 - 2.5"
55285 - 3"
50903 - 4"

Male Q.D. with Flange, Stainless Steel
52619 - 2"
56620 - 2.5"
50909 - 3"

Q.D. to Hose at 90° Fitting, *Stainless Steel*
56584 - 2"
56569 - 2.5"
56599 - 3"

Gaskets for Quick Disconnect Fittings
85362 - 1"
85366 - 1.25"
85364 - 1.5"
85363 - 2"
85365 - 2.5"
86188 - 3"
86195 - 4"

PILOT CONTROLS

20875 - Micrometer
For Air Tractor. A micrometer screw mechanism permits ready adjustment of gate stop.

20884 - Micro Control for Thrush. A micrometer screw mechanism with graduated 12" scale.
5 turns per inch adjusts gate stop.

*For parts breakdown see translandllc.com

COMPONENTS

HOPPER WINDOW KITS

Air Tractor
54415 - Window Kit, 17" x 6"

Standard
54109 - Window Kit, 13" x 6"

Weatherly
54421 - Window Kit, 9" x 9.375", Fits 400 gallon hopper.

SPRAY CONTROL HANDLE

21611 - Spray Control Handle for Thrush & Air Tractor.
Screw type handle adjusts stop for precise metering of liquids.

FANS FOR BOOMMASTER & SPRAYING SYSTEMS

60010 - 20" Dia. Counter Clockwise Fan
Laminated birchwood construction. Two blades w/ 22° pitch.

60016 - 11" Dia. Counter Clockwise Fan
Laminated birchwood construction. Four blades.
Used w/ Transland wind-driven agitator Gate Boxes.

60011 - 20" Dia. Counter Clockwise Fan
Laminated birchwood construction. 4 blades w/ 22° pitch.

CLAMPS & LATCHES

20441 - Over-Center Latch
Used with quick disconnect Pump Mounts, Quick Disconnect Flange & Line Strainers. Stainless steel.

50217 - Latch Assembly
Attaches spreader to gate box. Stainless steel.

54102 - Latch Hook Assembly
Q.D. attachment for swathmaster or spreader to Gate Box. Stainless steel.

85154 - Knuvise Clamp, Small

85155 - Knuvise Clamp, Large

85170 - De-Sta-Co Clamp
Used on dump gate of boommaster Pumps

*For parts breakdown see translandllc.com

COMPONENTS

MALE Q.D. FLANGED FITTINGS

42618 - 1.5" Aluminum
52618 - 1.5" Stainless steel
42619 - 2" Aluminum
52619 - 2" Stainless steel
42620 - 2.5" Aluminum
56620 - 2.5" Stainless steel
40909 - 3" Aluminum
50909 - 3" Stainless steel

40271 - Flanged Fitting, angled
2.5" Male Q.D. Aluminum

40317 Flanged Fitting, angled
2" Male Q.D. Aluminum.

50317 Flanged Fitting, angled
2" Male Q.D. Stainless steel.

BRAKE SHOES

Thrush, Ag-Cat, Snow & Stearman
50560 - Brake Shoe for 21859, 21860, 20861, 21864 & 21869
Transland 6.5" Impeller spray Pumps.
Also used on other types of spray Pumps.

Thrush & Ag-Cat
20503 - Brake Shoe for 20808 & 20810
7" Impeller spray Pumps.

Cessna, Piper & Callair
20502 - Brake Shoe for 20783 & 20790
6" Impeller spray Pumps.

SPACERS

52488 - Spacer w/ Quick Disconnect
Stainless steel.

52487 - Spacer for Thrush. Valve to Gate Box.
Stainless steel.

52587 - Spacer for Weatherly. Valve to Gate Box.
Stainless steel.

*For parts breakdown see translandllc.com

COMPONENTS

SPRAY NOZZLES

85489 - Nozzle, Brass
.125" NPT. D6 orifice. #45 core.

85117 - Nozzle, Aluminum
.125" NPT. D8 orifice. #45 core.

85521 - Nozzle, Nylon
.125" NPT. D6 orifice. #45 core.

85884 - Nozzle Diaphragm

85614 - D6 Orifice
D2 to D6 orifices also available.

85248 - #45 Brass Core
#13, 23, 25, 46 & 56 Cores are also available.

81168 - .125"" NPT Nipple

81175 - .125" NPT Plug

FOOT STEP

51917 - For use on any standard Foot Step.
Improves footing while entering the aircraft.
Stainless steel.

WRENCH STAINLESS STEAL SPRAY VALVES

51973 - Wrench
For installing & removing cap on 2" valves.

24072 - Wrench
For installing & removing cap on 2.5" & 3" valves.

*For parts breakdown see translandllc.com

APPENDIX

SPREADERS

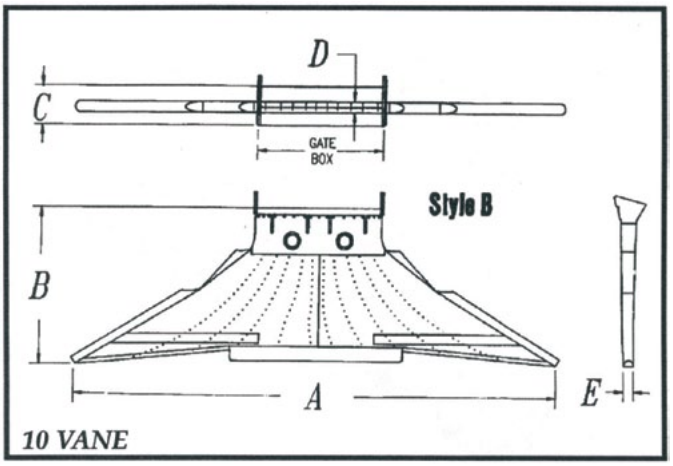

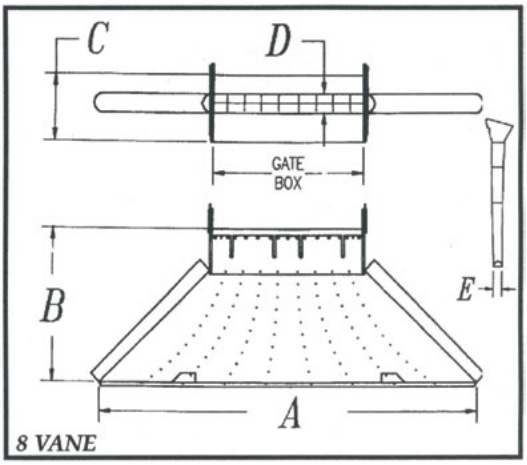

GATE SIZE	PART NO.	NO. VANES	A	B	C	D	E	WT.	COMMENTS
25*	20181	8	100	46	17	9.25	5	85	Similar to 20160 (fixed vane) with larger intake
25*	20241	8	100	45	13	5.5	4	80	Slimline version of 20160
25*	22118	8	100	45	17.25	10.5	6.4	90	Deep Throat for 25” Gate Box
25*	20330	8	80.5	34	8.75	8.75	5	80	High volume tail assembly
38	22003	4	X	X	X	X	X	X	4 vane Fire Gate Box spreader
38	22009	8	X	X	X	X	X	230	For 10” fire gate box
38*	22357	8	92.5	46	13.5	7.25	4.62	97	Slimline for Air Tractor and Ag-Cat
38	23538	10	157	54	15	8	6.5	160	10 Vane Deep Throat
38	23539	10	157	54	12.75	4.75	3.2	160	10 Vane Slimline
38*	22355	8	92.5	46	16	9.25	5	120	Originally designed for 38” Gate Box on Ag-Cat
38	22358	8	92.5	46	16.75	9.25	6.75	144	Most widely used on Air Tractor
38	23502	10	157	54	13.5	7	4.5	160	38” Gate Box version of 10 Vane Spreader, most popular
38*	22008	8	100	45	17.25	10.5	6.4	130	Deep Throat Spreader for high volume on Air Tractor
38	23537	10	157	54	X	X	X	160	10 Vane Deep Throat
41	20250	8	100	45	15.5	8.75	6.5	125	Mostly used on the Thrush & M18
41	23501	10	157	54	13.5	7	4.5	160	Original 10 vane spreader designed for Thrush & M18
41	22007	8	100	45	17.25	10.5	6.4	130	Deep Throat Spreader for high volume on Thrush & M18
41	23506	10	157	54	15	8	6.5	160	10 Vane Deep Throat
41	23533	10	157	54	XX	XX	XX	160	10 Vane Deep Throat

These are not stock items, call for pricing and availability.

*For parts breakdown see translandllc.com

SWATHMASTERS

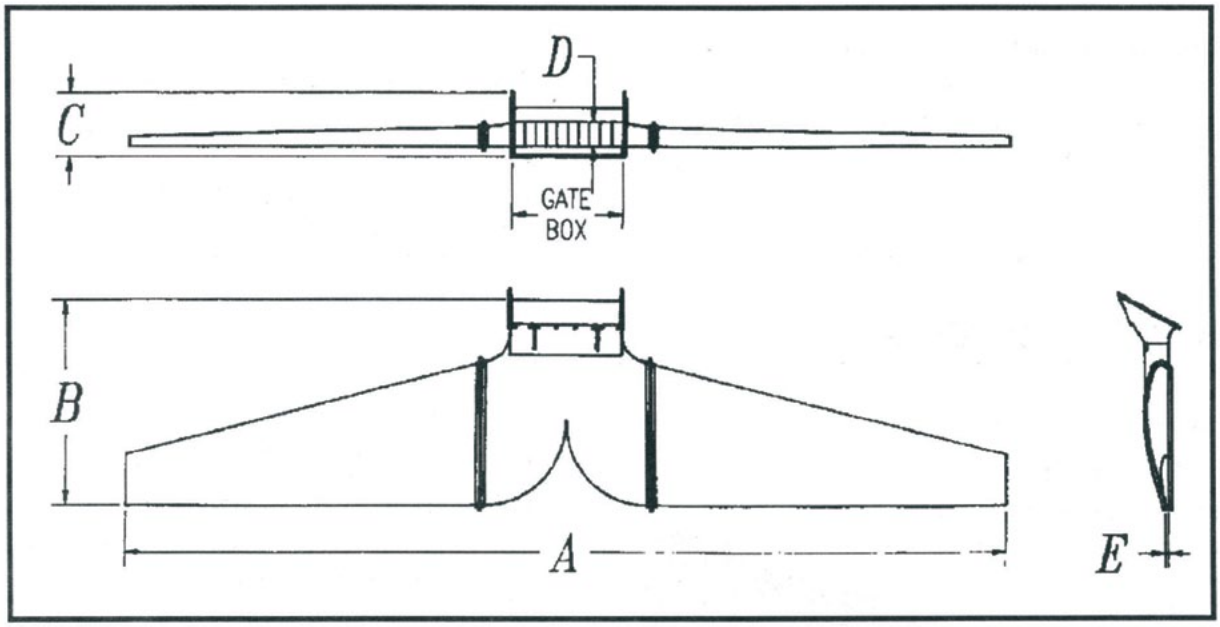

GATE BOX	PART NO.	A	B	C	D	E	WT.	COMMENTS
25	54401	205	40	10	8	1.62	126	Swathmaster
31*	54336	199.62	31	13.7	4.9	.75	81	Fits Piper Brave only
38	54597	218	40	10	8	1.62	105	Air Tractor
38*	54495	206	38	14	5	.75	80	Small Swathmaster
38	54496	202	37	16	8	1.62	85	Air Tractor
38*	54497	290	40	10	8	1.62	103	Air Tractor 802 / 24 foot span
41	54499	205	37	10	8	1.62	105	Thrush

These are not stock items, call for pricing and availability.

*For parts breakdown see translandllc.com

AIRCRAFT CALIBRATION

FORMULA: Acres per minute = $\frac{\text{2 x swath width x miles per hour}}{\text{1,000}}$

The chart below shows the rate (in acres per minute) at which spray or dry material can be applied when swath width and speed of aircraft are known. For swath widths or aircraft speeds other than those shown, interpolate or use combinations of the figures shown. To find the rate of flow in gallons per minute or pounds per minute, multiply the acres per minute by the number of gallons or pounds per acre to be applied.

Example: A 100 m.p.h. aircraft has a 40 foot effective swath. Follow the vertical 40 foot column down until the figure opposite 100 m.p.h. is intersected. The aircraft would cover 8.0 acres per minute. If one gallon of spray is to be applied per acre, the aircraft should be calibrated to disperse liquid at the rate of 1 x 8.0 or 8.0 gallons per minute. If 10 pounds of dry material is to applied per acre, the aircraft should be calibrated to disperse material at the rate of 10 X 8.0 or 80 pounds per minute.

Speed MPH	30' Swath	35' Swath	40' Swath	45' Swath	50' Swath	75' Swath	100' Swath	200' Swath	300' Swath	500' Swath
75	4.5	5.2	6.0	6.7	7.5	11.2	15.0	30.0	45.0	75.0
80	4.8	5.6	6.4	7.2	8.0	12.0	16.0	32.0	48.0	80.0
85	5.1	5.9	6.8	7.6	8.5	12.7	17.0	34.0	51.0	85.0
90	5.4	6.3	7.2	8.1	9.0	13.5	18.0	36.0	54.0	90.0
95	5.7	6.6	7.6	8.5	9.5	14.2	19.0	38.0	57.0	95.0
100	6.0	7.0	8.0	9.0	10.0	15.0	20.0	40.0	60.0	100.0
110	6.6	7.7	8.8	9.9	11.0	16.5	22.0	44.0	66.0	110.0
120	7.2	8.4	9.6	10.8	12.0	18.0	24.0	48.0	72.0	120.0
130	7.8	9.1	10.4	11.7	13.0	19.5	26.0	52.0	78.0	130.0
140	8.4	9.8	11.2	12.6	14.0	21.0	28.0	56.0	84.0	140.0
150	9.0	10.5	12.0	13.5	15.0	22.5	30.0	60.0	90.0	150.0

Computation of Acreage and Materials

FORMULA: Acres covered = $\frac{\text{Length of swath in miles x width of swath in feet}}{\text{8.25}}$

The number of acres in a swath of given width and length can be determined from the chart below.

To determine the amount of pesticide required, multiply the acres by the desired rate of application.

Example: An aircraft with a 40 foot effective swath treats a one mile long strip. To find the number of acres, follow the 40 foot vertical column down until it intersects the one mile line. The answer to the nearest tenth is 4.8 acres. For swath widths other than those shown, interpolate or use combinations of the figures shown.

Swath Length (Miles)	30' Swath	35' Swath	40' Swath	45' Swath	50' Swath	75' Swath	100' Swath	200' Swath	300' Swath	500' Swath
1/4	.9	1.1	1.2	1.4	1.5	2.3	3.0	6.1	9.1	15.2
1/2	1.8	2.1	2.4	2.7	3.0	4.5	6.1	12.1	18.2	30.3
3/4	2.7	3.2	3.6	4.1	4.6	6.8	9.1	18.2	27.3	45.4
1	3.6	4.2	4.8	5.5	6.1	9.1	12.1	24.2	36.4	60.6
2	7.2	8.4	9.8	10.9	12.1	18.2	24.2	48.5	72.7	121.2
3	10.8	12.6	14.5	16.4	18.2	27.3	36.4	72.7	109.1	181.8
4	14.4	16.8	19.4	21.8	24.2	36.4	48.5	97.0	145.4	242.4
5	18.0	21.0	24.2	27.3	30.3	45.5	60.6	121.1	181.8	303.0

*For parts breakdown see translandllc.com

SALES ORDER
BY FAX

TO: **TRANSLAND**

FAX: (940)687-1941

ATTN: SALES

PHONE : 940-687-1100

FROM: NAME: _____

COMPANY: _____

TELEPHONE NO.: _____

FAX NO.: _____

DATE: _____

CUSTOMER NO.: _____ CUSTOMER P.O. NO.: _____

SHIP VIA: _____

AC1014X

SHIPPING ADDRESS:

_____

_____

_____

BILLING ADDRESS:

_____

_____

_____

PART NO.	QTY	DESCRIPTION	PRICE

Boom Order Form
BY FAX

TO: TRANSLAND
FAX : (940) 687-1941
ATTN: SALES
PHONE : 940-687-1100

FROM: NAME: _____
COMPANY: _____
TELEPHONE NO.: _____
FAX NO.: _____

☐ 1/2" ☐ 3/4" ☐ 1"

☐ MALE ☐ FEMALE

☐ NPT ☐ Q.D.

☐ 1" ☐ 1-1/2" ☐ 2" ☐ 2-1/2" ☐ 3"

☐ ROUND ☐ STREAMLINE ☐ AIRFOIL

☐ 1" ☐ 1-1/2" ☐ 2" ☐ 2-1/2" ☐ 3"

☐ MALE ☐ FEMALE

☐ Q.D. ☐ HOSE FITTING

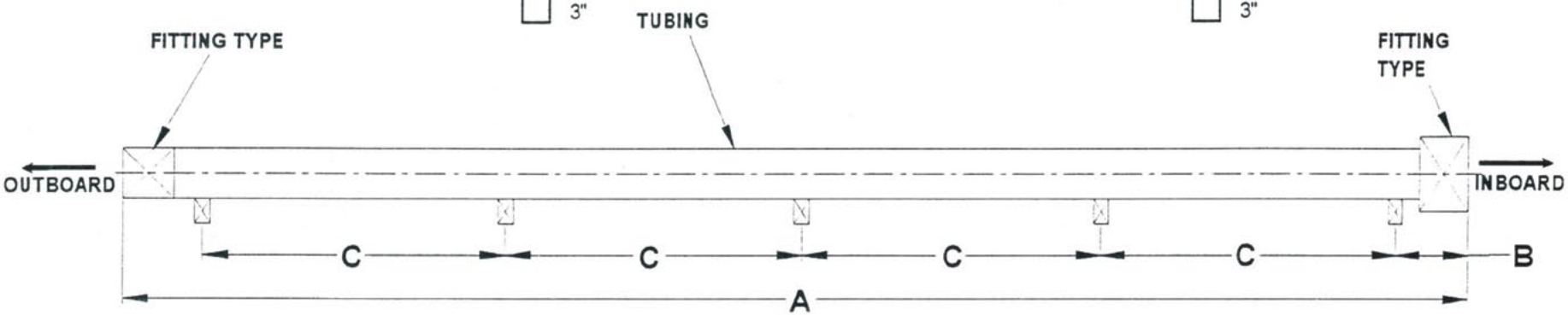

NIPPLE REQUIREMENTS

☐ 1/8" ☐ MALE
☐ 1/4" ☐ FEMALE

TOTAL NO. OF NIPPLES: _____

NOTE: AIRFOIL IS ONLY AVAILABLE IN 2"

A = OVERALL LENGTH: _____

B = INBOARD END TO FIRST FITTING: _____

C = DISTANCE CENTER TO CENTER OF FITTINGS: _____

Center Boom Order Form
BY FAX

TRANSLAND
FAX: (940)687-1941
ATTN: SALES
PHONE : 940-687-1100

FROM:
NAME: _____
COMPANY: _____
TELEPHONE NO.: _____
FAX NO.: _____

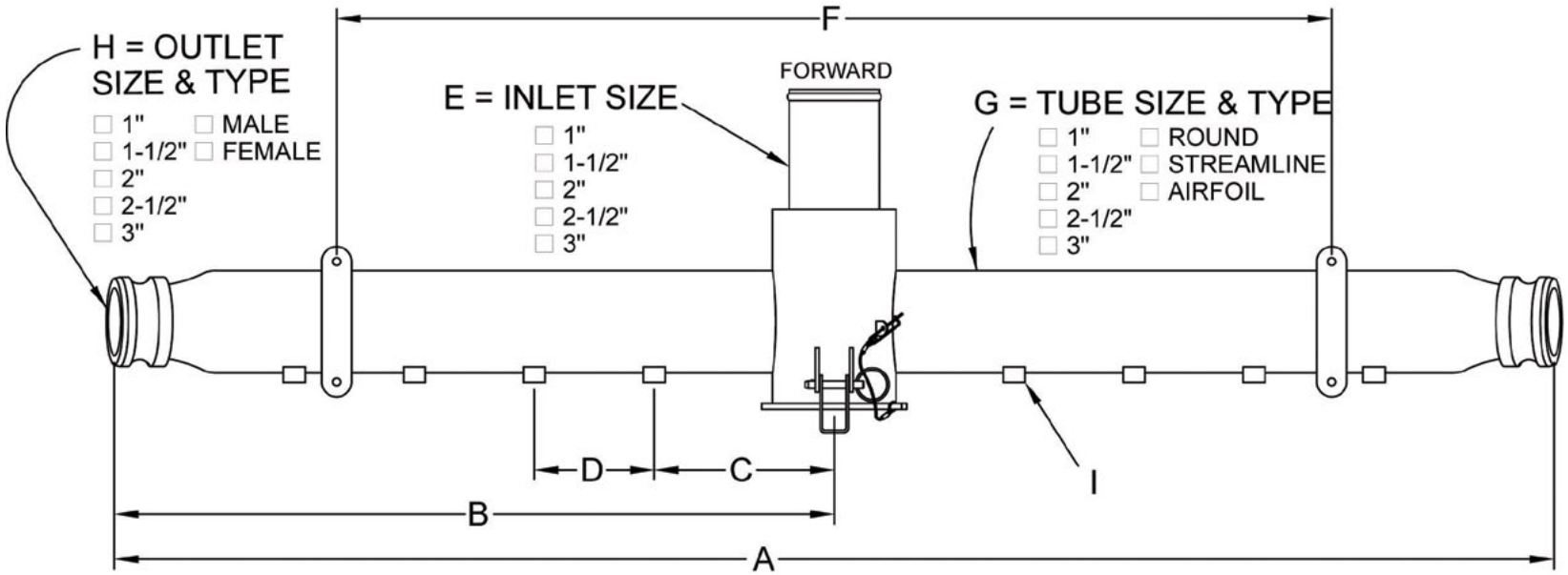

NOTE : AIRFOIL IS ONLY AVAILABLE IN 2”

I - NIPPLE SIZE AND TYPE

☐ 1/8”	☐ MALE
☐ 1/4”	☐ FEMALE

TOTAL NO. OF NIPPLES: _____

A = Overall Length _____
B = Distance From Center of Inlet To End of Outlet _____
C = Distance From Center of Inlet to Center of 1st Nipple _____
D = Spacing of Nipples _____
F = Center to Center Distance Between Boom Hangers _____

Angle_____
(enter 0 for none)

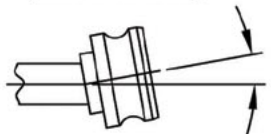

Graduated Boom Order Form
BY FAX

TO: TRANSLAND
FAX: (940) 697-1941
ATTN: SALES
PHONE: 940-687-1100

FROM: NAME: _____
COMPANY: _____
TELEPHONE NO.: _____
FAX NO.: _____

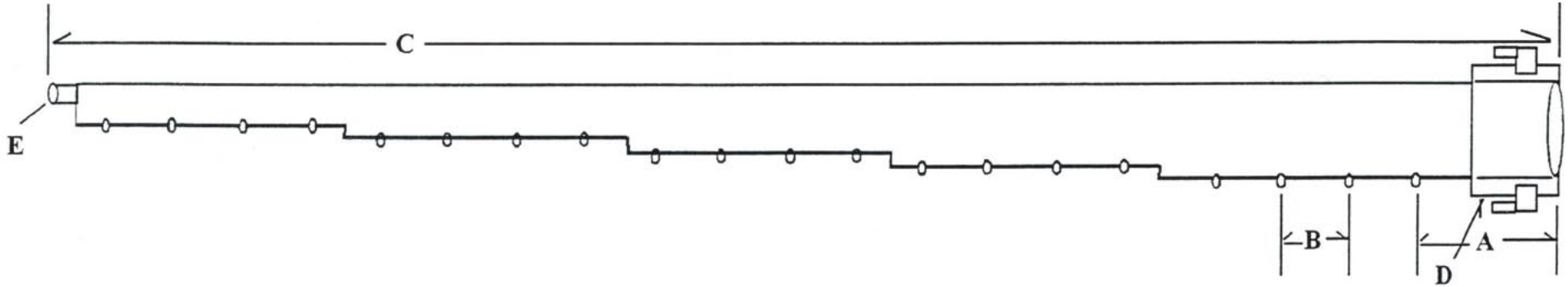

A = Distance from inboard end of boom to center of first nipple: _____

B = Boom overall length(end to end): _____

Number of graduations: _____

Starting graduation size: _____

Total number of nipples: _____

Hanger placements _____

Aircraft Type _____ Model _____

Tube Section Sizes Available

58520	THRUSH	2” Standard	4 Grads
58521	AIR TRACTOR	2” Standard	4 Grads
58524	AG-CAT	2” Standard	4 Grads
58525	BRAVE	2” Standard	4 Grads
58543	CESSNA	2” Standard	4 Grads
58571	WEATHERLY	2” Standard	4 Grads
58579	WEATHERLY	2-1/2”	4 Grads
58519	THRUSH		5 Grads
58572	WEATHERLY	2-1/2”	6 Grads
58522	THRUSH	2-1/2”	6 Grads
58523	AIR TRACTOR	2-1/2”	6 Grads

Helicopter Boom Order Form
BY FAX

TO: TRANSLAND
FAX : (940) 687-1941
ATTN: SALES
PHONE: 940-687-1100

FROM: NAME: _____
COMPANY: _____
TELEPHONE NO.: _____
FAX NO.: _____

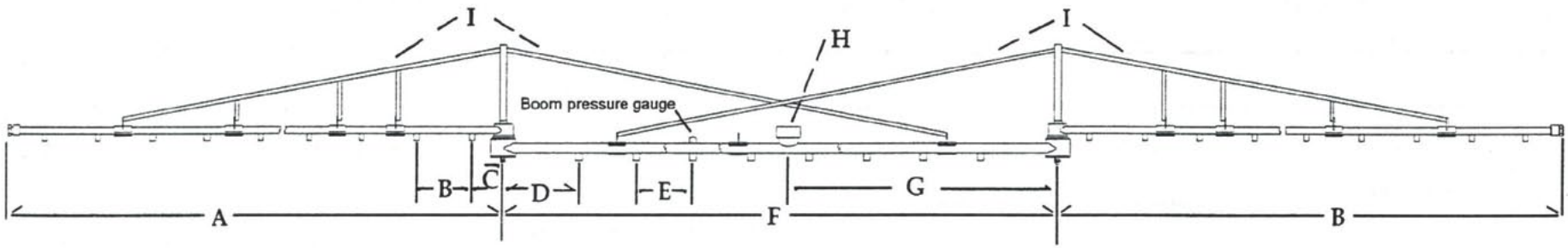

REQUIREMENTS
(AS VIEWED FROM THE PILOT SEAT)

Type of Aircraft _____

☐ Graduated Booms(circle 2 or 3 sizes) 1½ 1¼ 1

AL & AR = _____ Overall length of outboard booms
B = _____ Center to center distance of nipples on outboard booms
C = _____ Distance from center post to first nipple on outboard boom
D = _____ Distance from center post to first nipple on center boom
E = _____ Center to center distance of nipples on center boom
F = _____ Overall length of center boom from center to center of posts
G = _____ Distance from right hand post to center of inlet
H = _____ Inlet size Inlet Type: ____ Male ____ Female
I = Include Stainless Steel tubular braces (at extra charge) ____ Yes ____ No

COMMENTS: _____

Nipple Requirements

Type
☐ Male
☐ Female

Location
☐ On Bottom
☐ On Trailing Edge

Size
☐ 1/8”
☐ 1/4”

Total Number of Nipples

Standard outboard washout is 1/2” female pipe thread with hex plug, Specify:

☐ Standard ☐ Other _____

Distrubutors

Arkansas
American Aviation, Inc.
P.O. Box 482
Walnut Ridge AR 72467
(870) 886-2418

Frost Flying Service, Inc.
3393 HWY 121 WEST
Marianna, AR 72360
(870) 295-6218

South Delta Aviation, Inc.
124 Phillips 204 RD
West Helena, AR 72390
(870) 572-9011

Crowley Ridge Aviation, Inc.
230 Phillips 204 RD
West Helena, AR 72390
(870) 572-9013

California
Johnston Aircraft Service, Inc.
P.O Box 1457
Tulare,CA 93275
(559) 686-1794

Valley Air Crafts
P.O. Box 566
Tulare,CA 73275
(559) 686-7401

Jones Flying Service
P.O. BOX 497
Biggs, CA 95917
(530) 868-1222

Florida
Airparts Company Inc.
2310 NW 55th Court
Ft. Lauderdale, FL 33309
(954) 739-3575

Southeastern Aircraft Sales
2720 Sneed RD
Fort Pierce FL 34945
(772) 461-8924

Georgia
Southern Field Aviation
223 Airport Rd
Americus, GA 31709
(229) 924-2813

Thrush Aircraft, Inc.
300 Old Pretoria RD
Albany GA 31706
(229) 883 1440

Idaho
Queen Bee Air Specialties
136 N Yellowstone Hwy
Rigby, ID 83442
(800) 736-7654

R & S Aviation (Gustin)
P.O. BOX 519
Lewiston,ID 83501
(208) 743-1554

Illinois
Farm Air, Inc
P.O. BOX 476
Fairfield, IL 62837
(618) 842-7121

Louisiana
Landry Aero
584 Nighthawk Road
Morse,LA 70559
(337) 783-7366

Lyon Flying Service
P.O BOX 726
Welsh,LA 70951 USA
(337) 734-2594

Mississippi
Abide AG-Aero Corp.
P.O. Box 5755
Greenville, MS 38704
(662) 378-2205

Air Repair, Inc.
920 Airport Service RD
Cleveland, MS 38732
(662) 846-0228

Missouri
Mid-Continent Aircraft Corp.
1601 HWY 84 EAST
Hayti, MO 63851
(800) 325-0885

Earl's Flying Service
1051 Administration Dr.
Steele, MO 63877
(573) 695-3842

Nebraska
Hershey Flying Service
P.O. BOX 215
HERSHEY, NE 69143
(308) 368-5556

North Carolina
Air Car, Inc.
P.O. BOX 7668
Rocky Mount, NC 27804
(800) 334-9816

North Dakota
Sky Tractor Supply
16285 5th ST. NE
Hillsboro ND 58045
(800) 437-5319

Oklahoma
J & C Enterprise
Airport Road #14
Thomas OK 73669
(800) 542-8565

Texas
Lane Aviation.
3205 FM 2218
Rosenberg TX, 77471
(800) 231-6376

Neal Aircraft, Inc.
Rt 4,Box 7
Slaton, TX 79364
(877) 647-6325

Air Tractor, Inc.
P.O BOX 485
Olney, TX 76374
(940) 564-5616

George's Aircraft
11674 Hwy. 70
Vernon, TX 76384
(940) 552-5869

International

Argentina
Aravia S.A.
Dorrego 651(S2600GAI)
Venado Tuerto
Santa Fe, Argentina
54 3462 433540

Australia
Field Air
184 Airport Access RD
Ballarat Airport
Victoria 3351
+61 3 5339 1222

Statewide Aviation
West Side Airport
Blueberry Rd. Moree NSW 2400
02 6751 1500

Canada
Yorkton Aircraft Service Ltd.
Box 1604 Yorkton
Saskatchewan, Canada
800-776-4656

South Africa
Orsmond Aviation
P.O. BOX 144
Bethlehem, Free State, 9700
South Africa
+27-(0)-58-303-5261